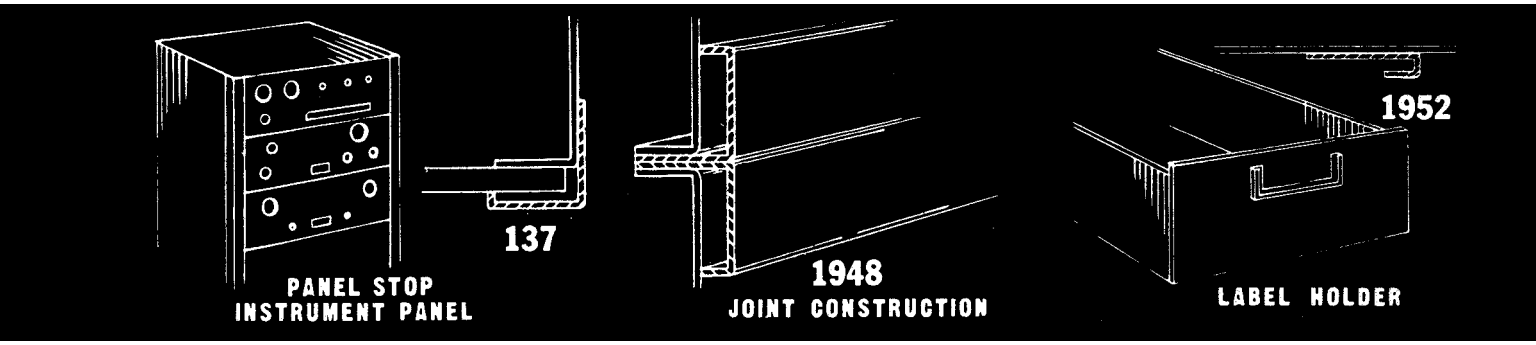
PANEL STOP
INSTRUMENT PANEL
137
1948
JOINT CONSTRUCTION
1952
LABEL HOLDER

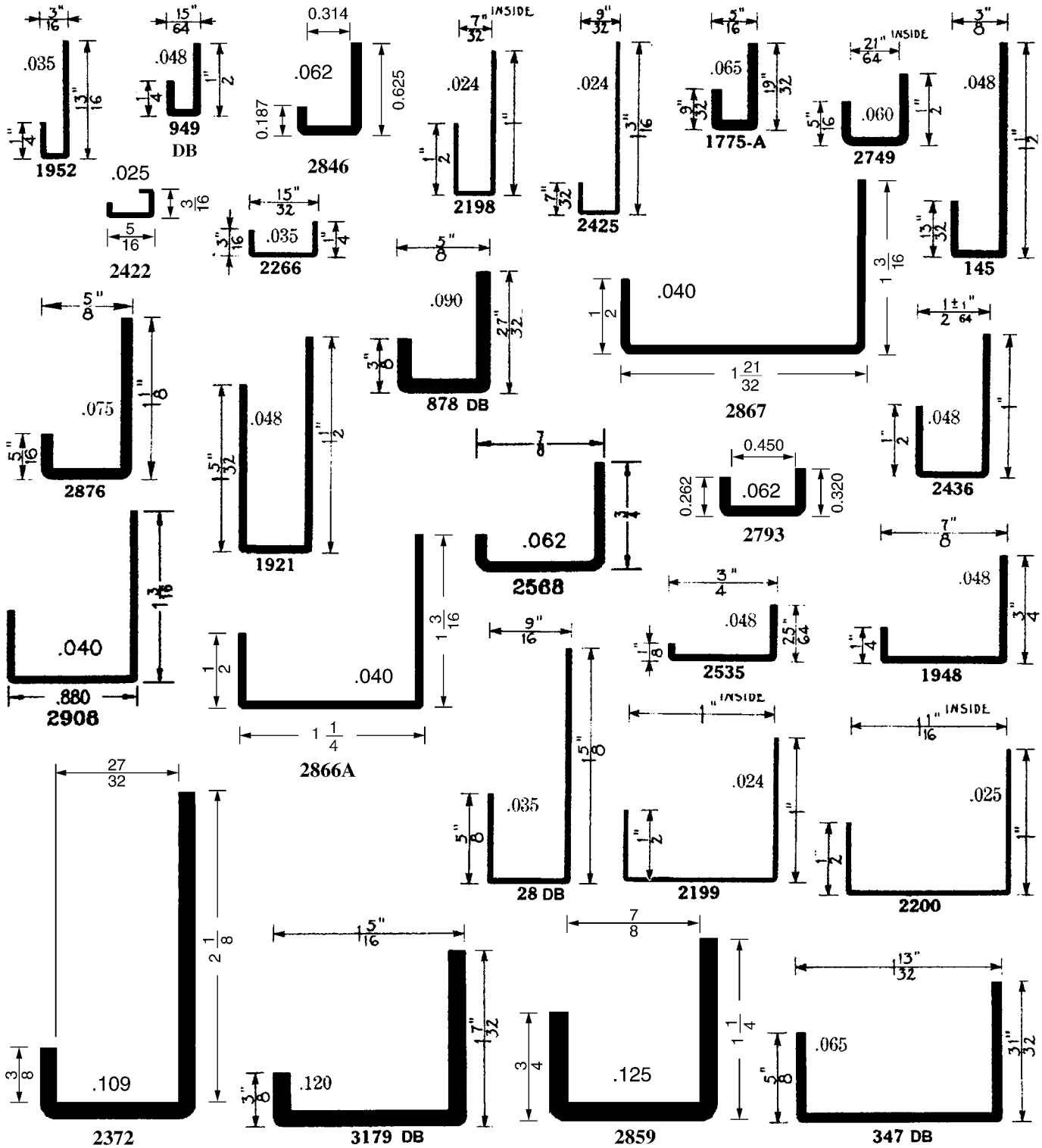
1952
949 DB
2846
2198
2425
1775-A
2749
145
2422
2266
878 DB
2867
2876
1921
2436
2568
2793
2908
2866A
2535
1948
28 DB
2199
2200
2372
3179 DB
2859
347 DB

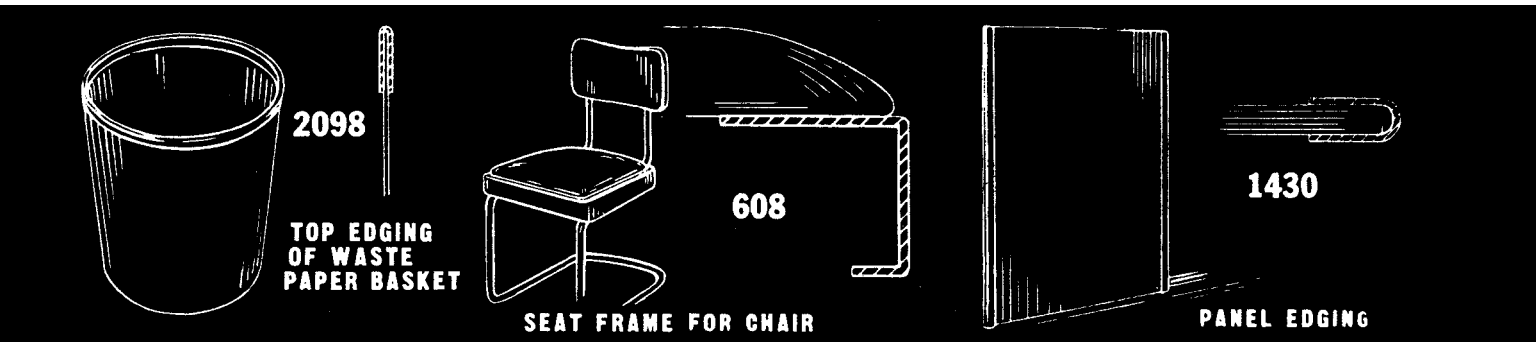
2098
TOP EDGING OF WASTE PAPER BASKET
608
SEAT FRAME FOR CHAIR
1430
PANEL EDGING

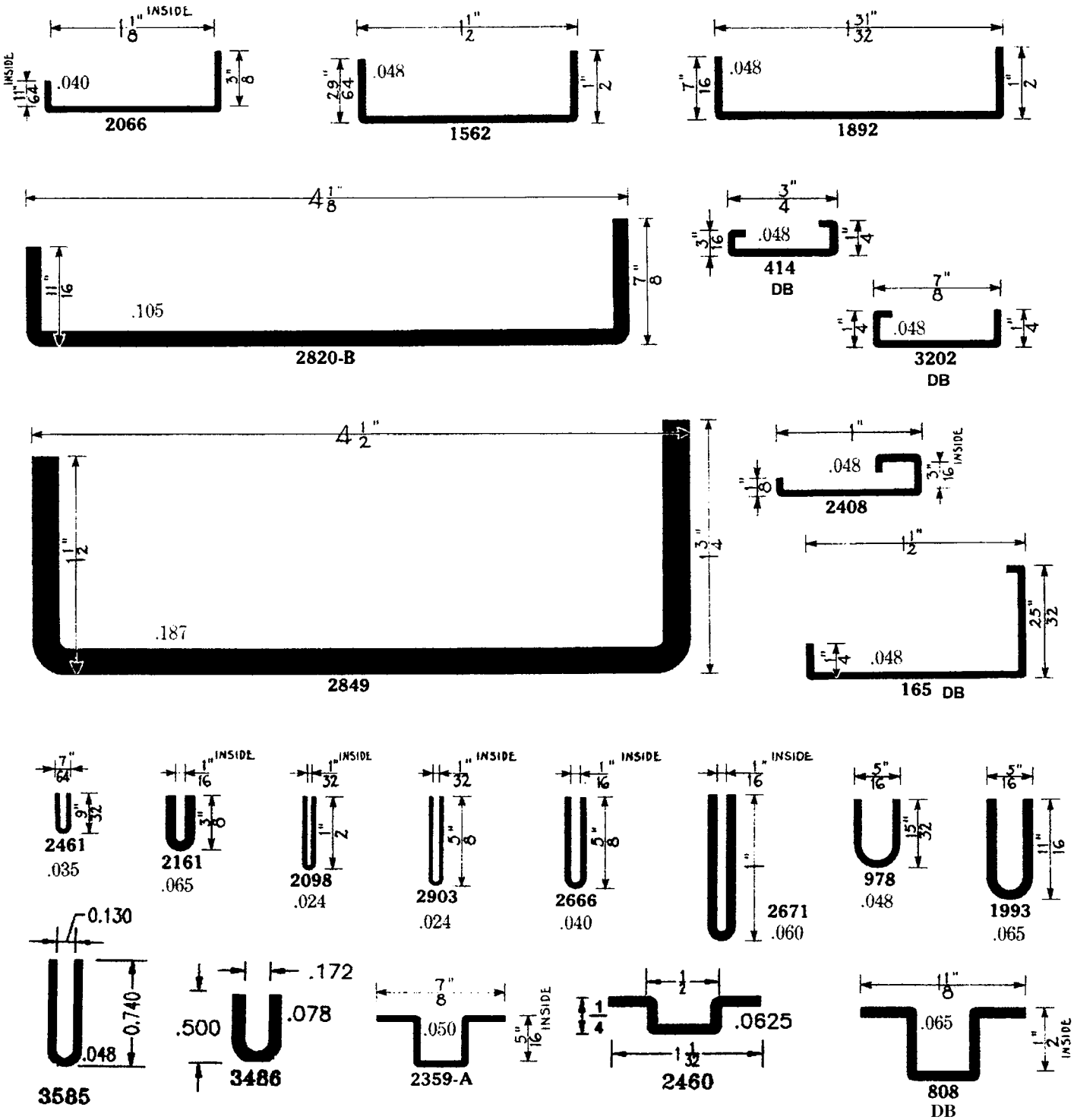
1 1/8" INSIDE
.040
2066
1/2"
.048
1562
1 31/32"
.048
1892
4 1/8"
.105
2820-B
3/4"
.048
414 DB
7/8"
.048
3202 DB
4 1/2"
.187
2849
1"
.048
2408
1/2"
.048
165 DB
7/64"
2461 .035
1/16" INSIDE
2161 .065
1/32" INSIDE
2098 .024
1/32" INSIDE
2903 .024
1/16" INSIDE
2666 .040
1/16" INSIDE
2671 .060
5/16"
978 .048
5/16"
1993 .065
0.130
0.740
.048
3585
.172
.500
.078
3486
7/8"
.050
2359-A
1/2
1/4
.0625
2460
1 1/8"
.065
808 DB